rubinetterie MARIANI

RUBINETTERIE MARIANI S.r.l.
Via Berlino 2/4 - 24040 Zingonia (BG) - Tel. +39 035 4192911 - Fax +39 035 4192925
www.rubinetteriemariani.it - info@rubmar.it
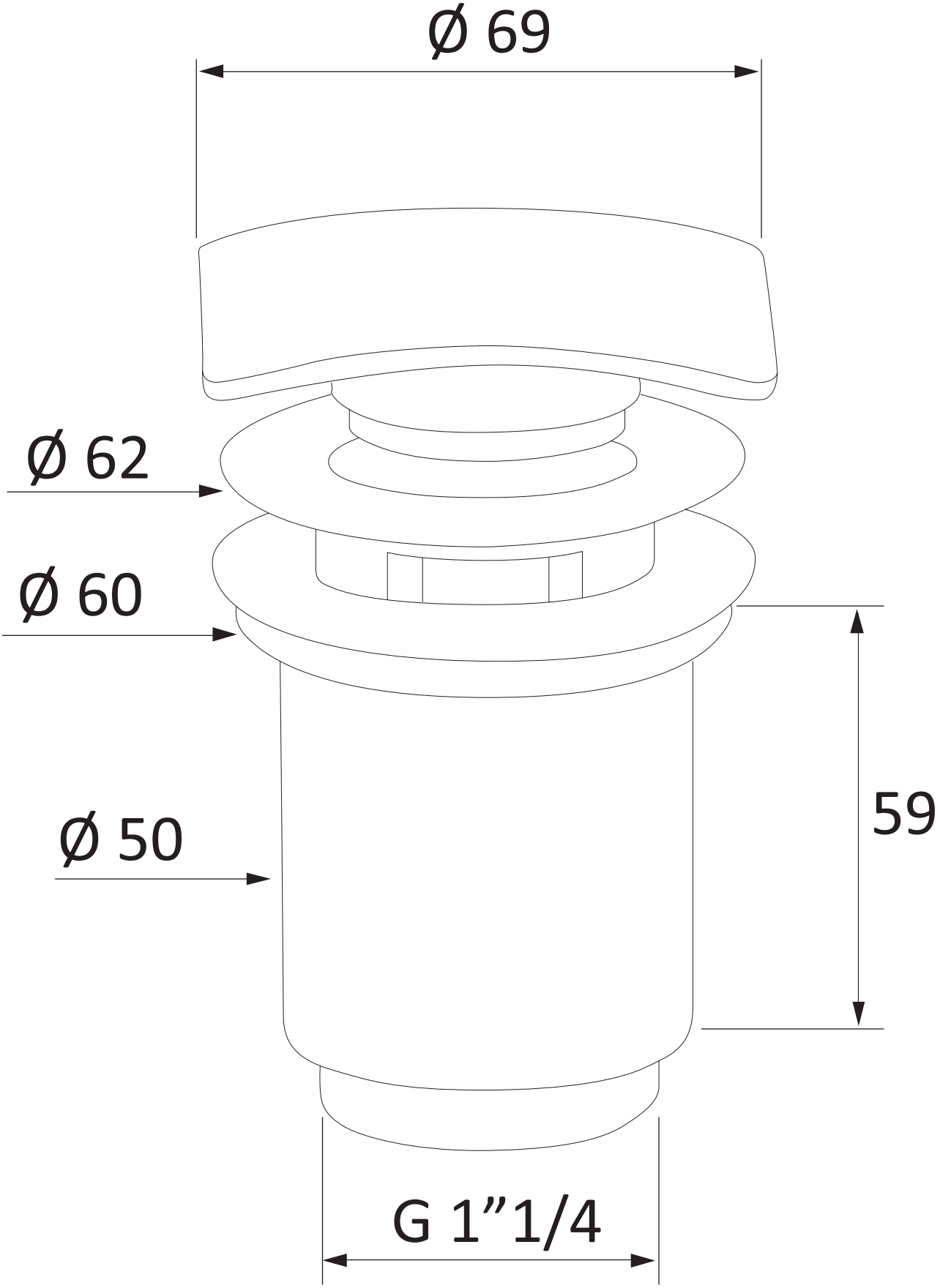
Art. 440/QD