ORTAL
YOUR LIFE. YOUR FIRE

150 TS

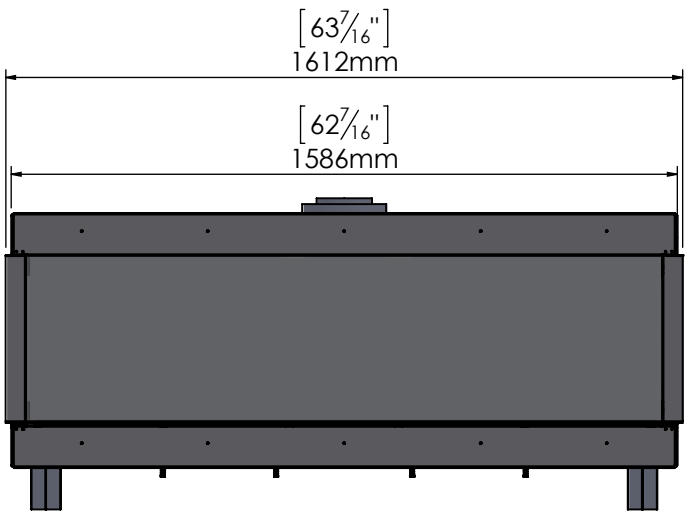

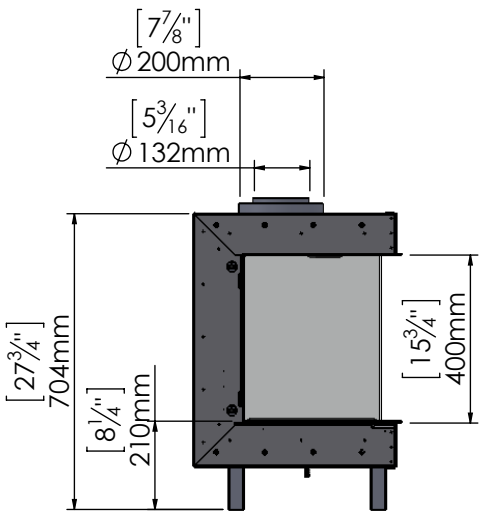

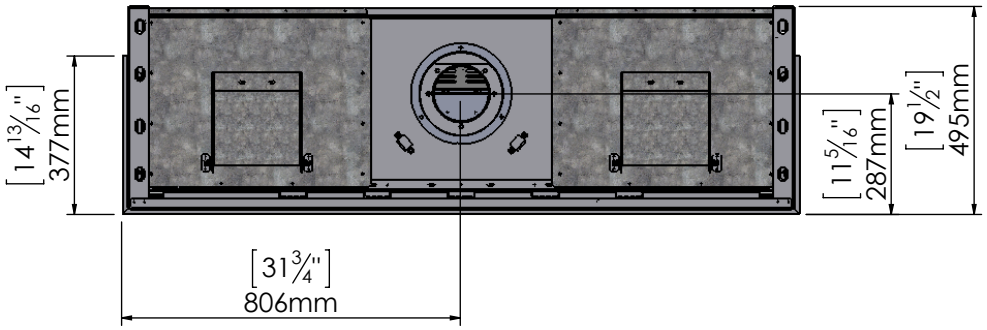

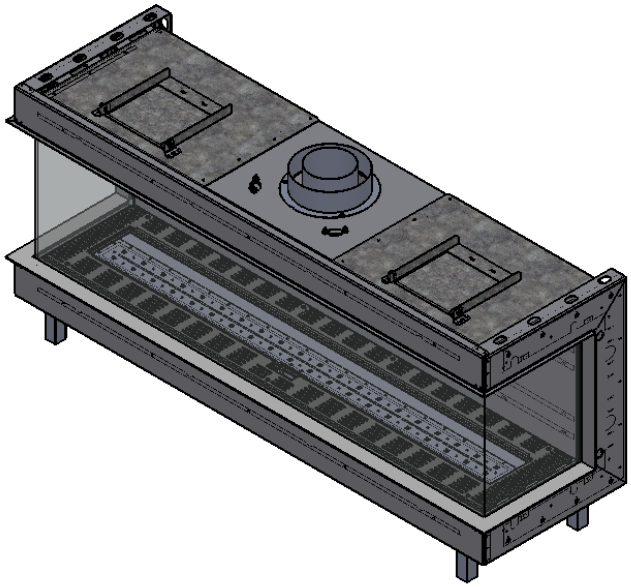

11/12/2017